BT 1020 - GENIUS (CA) / ATM 50

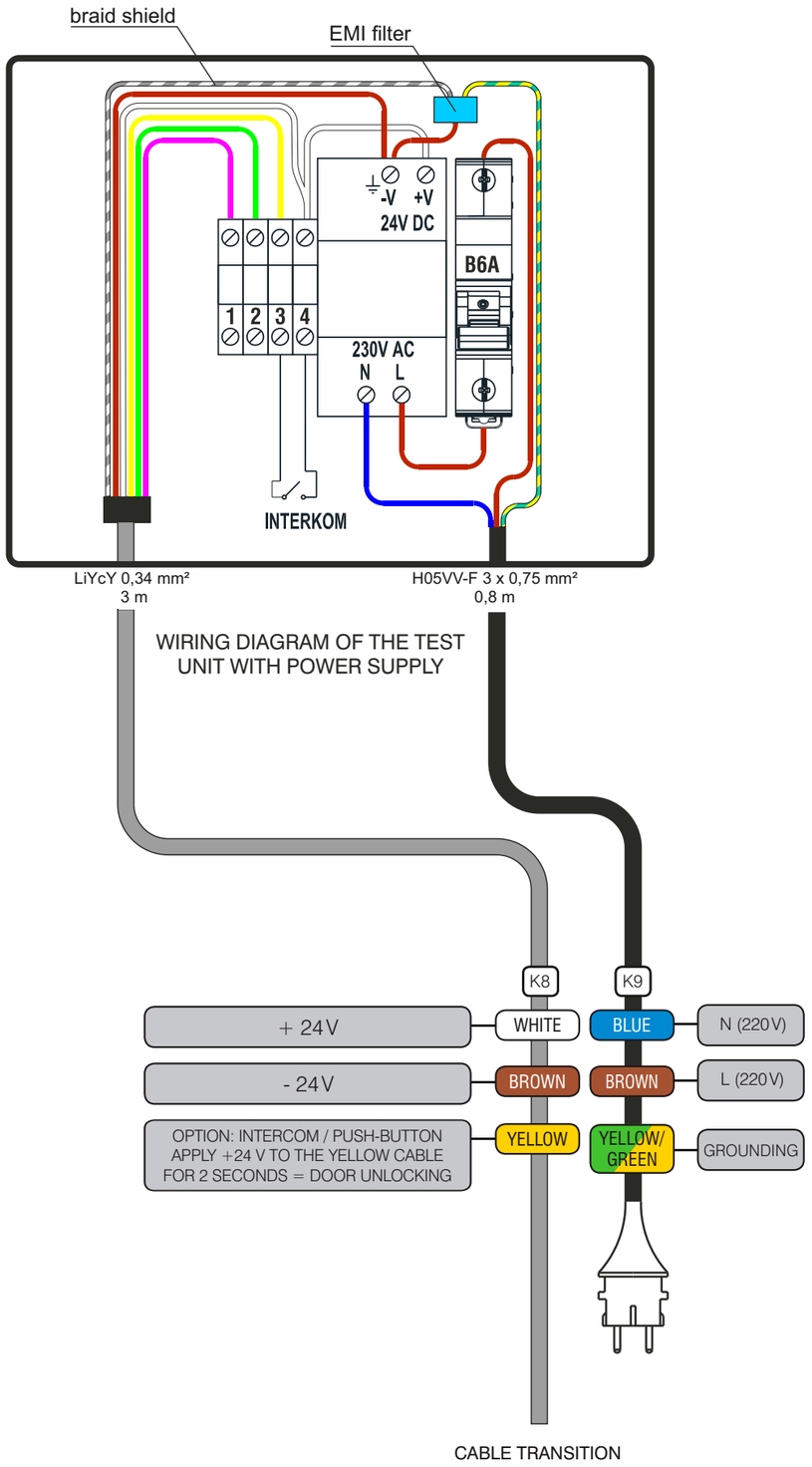

BT 1022 - GENIUS (CB)

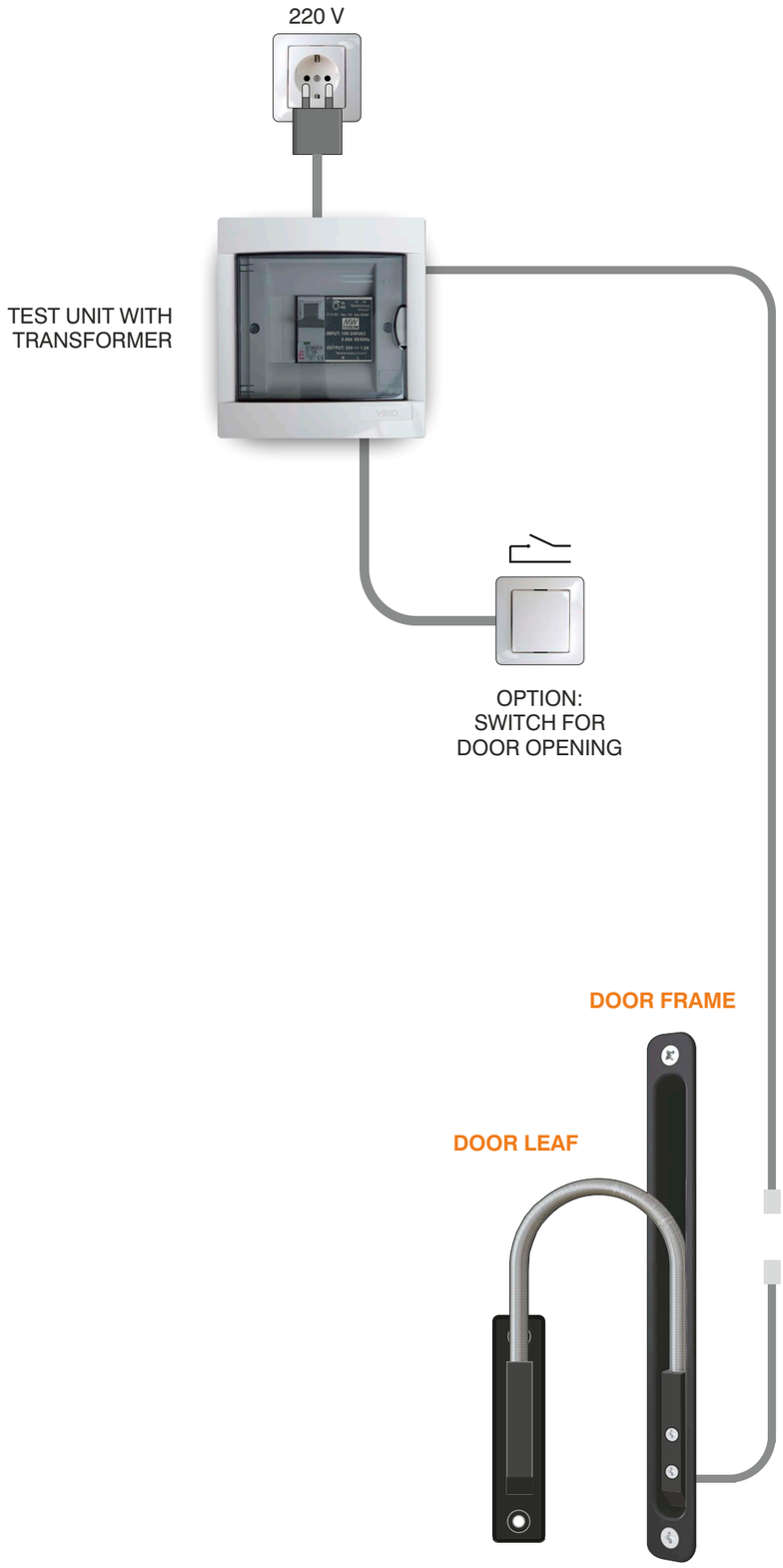

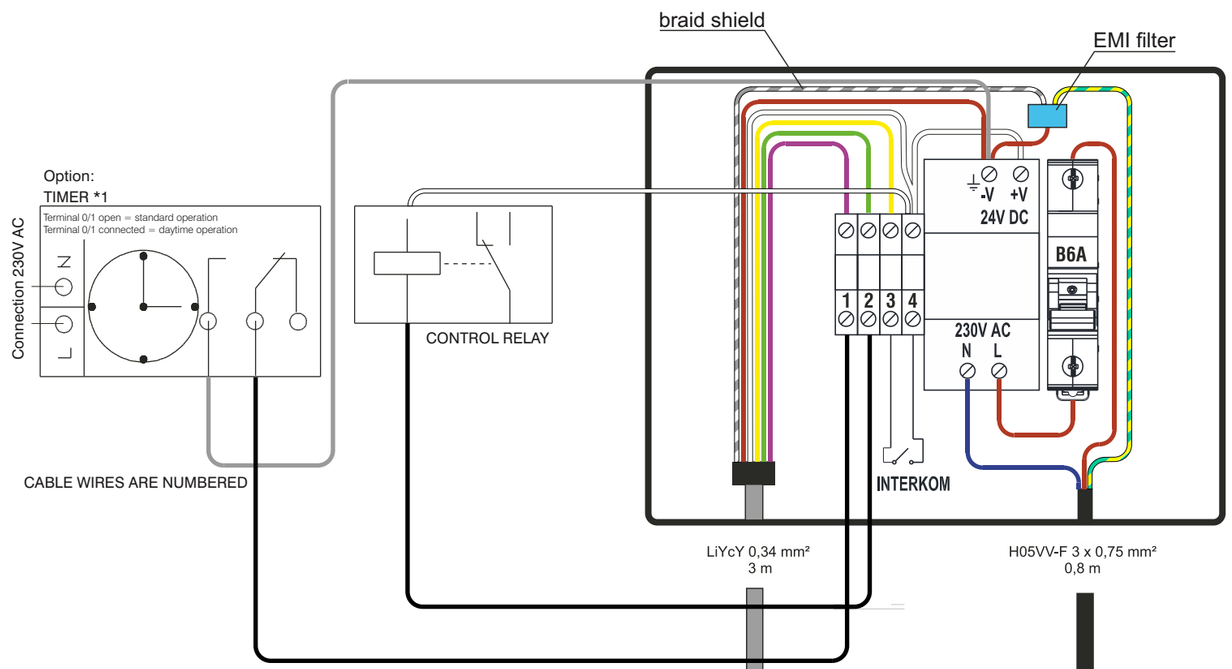

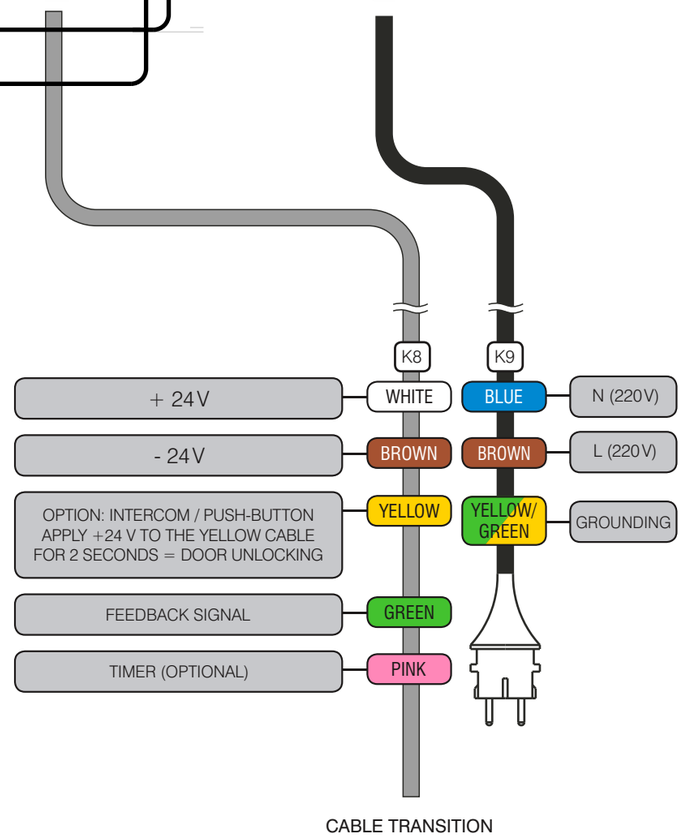

BT 1020 (CA) / ATM 50 + LED

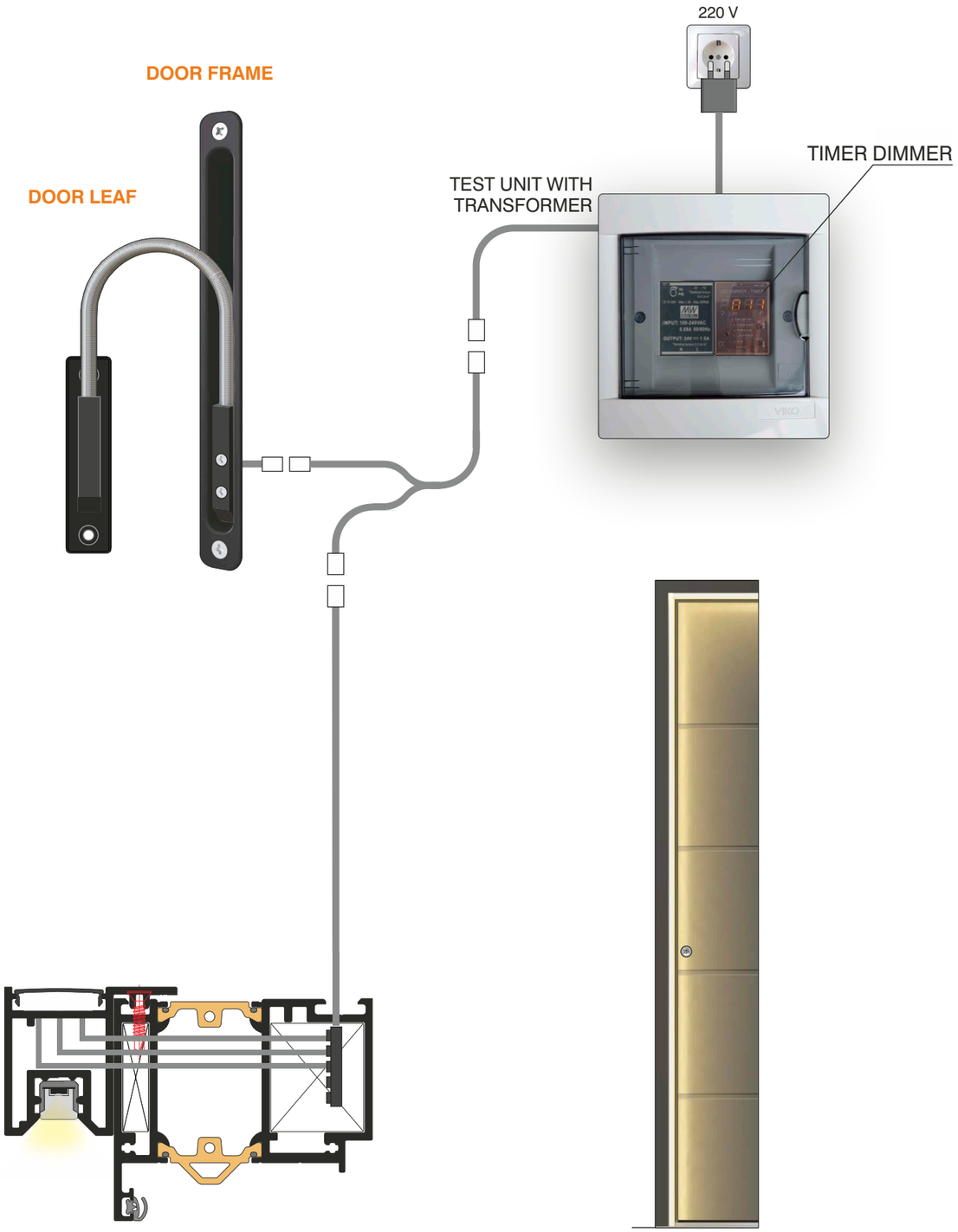

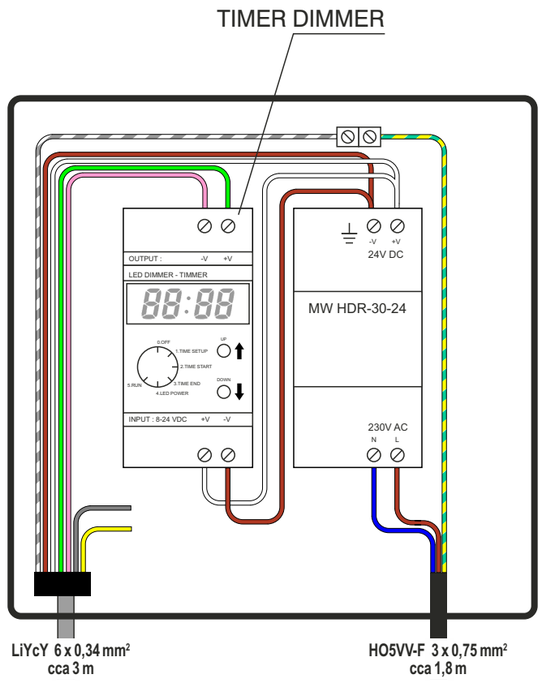

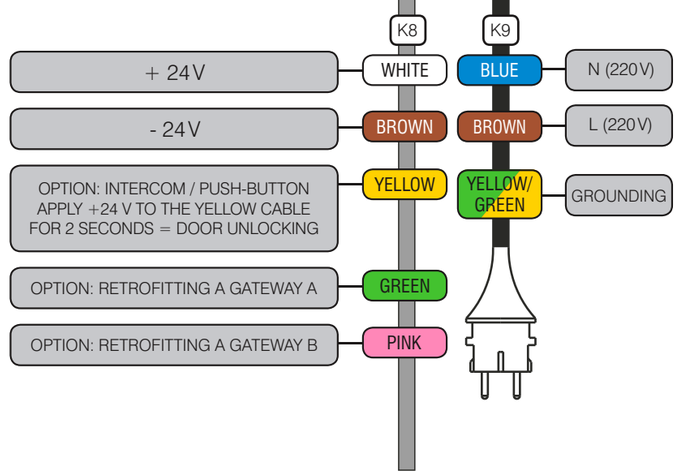

CABLE TRANSITION

BT 1022 (CB) + LED

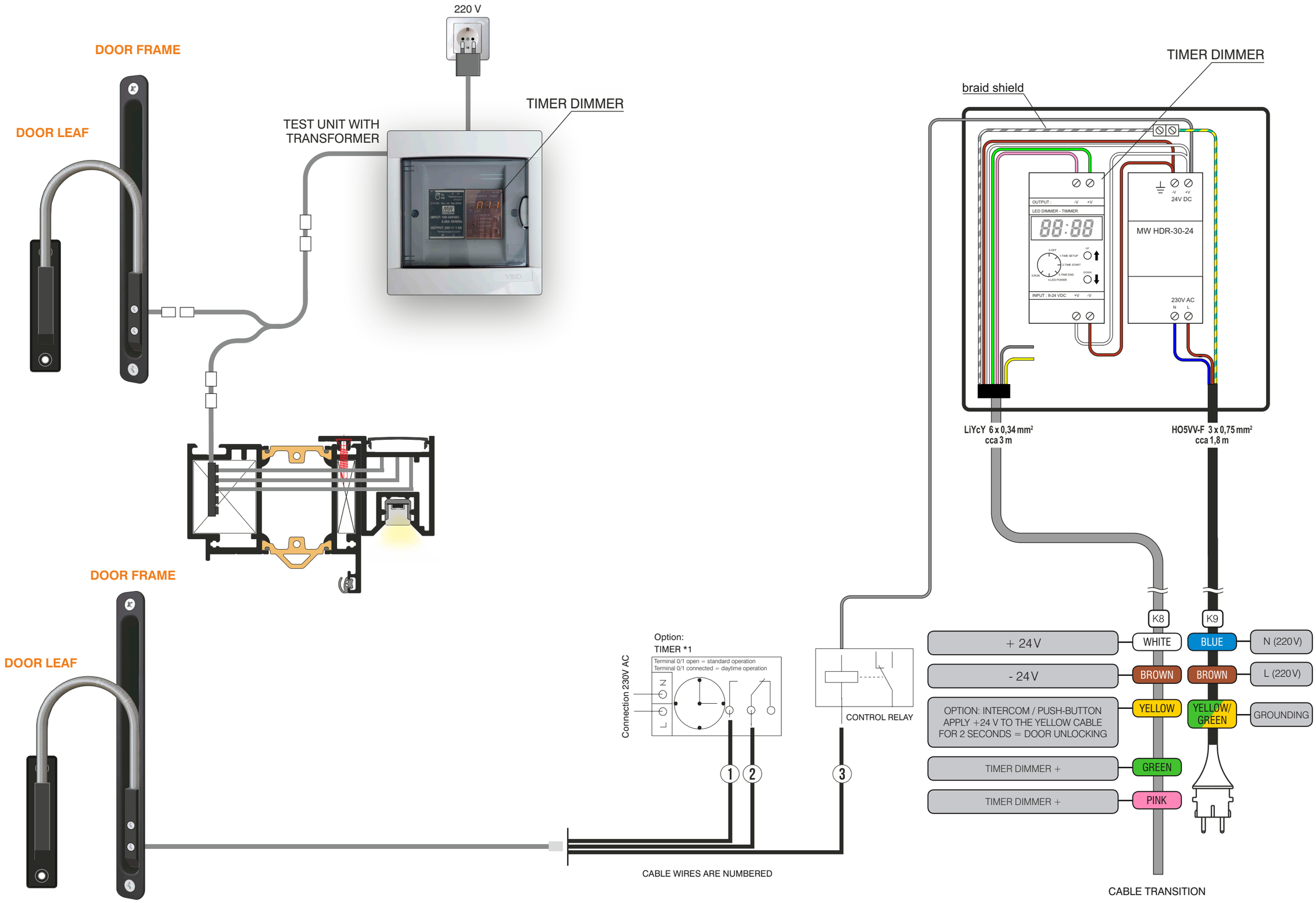

INOSMART BT 6X0 (CB) + LED

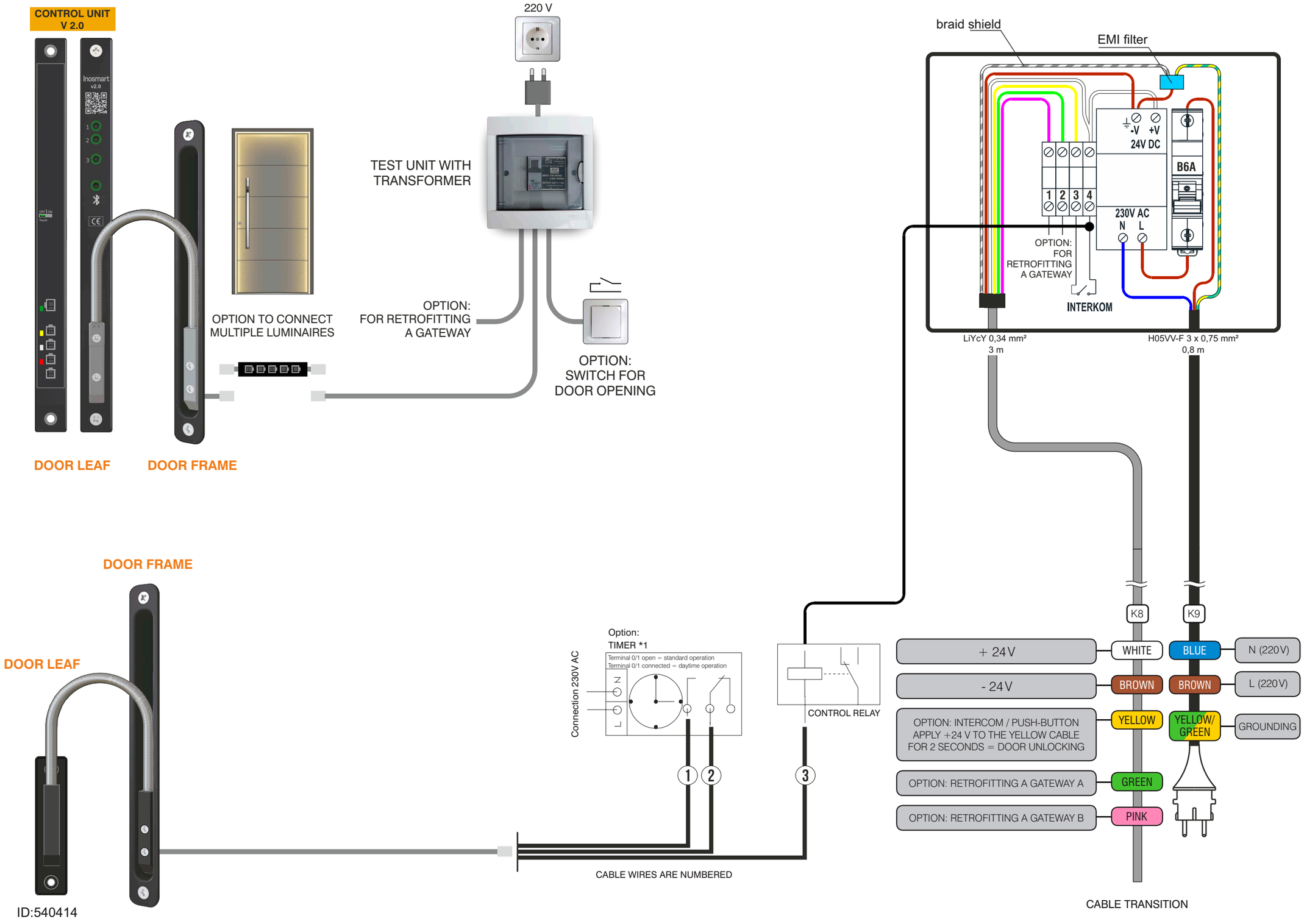

INOSMART BT 6x0 (CA) + AT 6X0 + (LED)

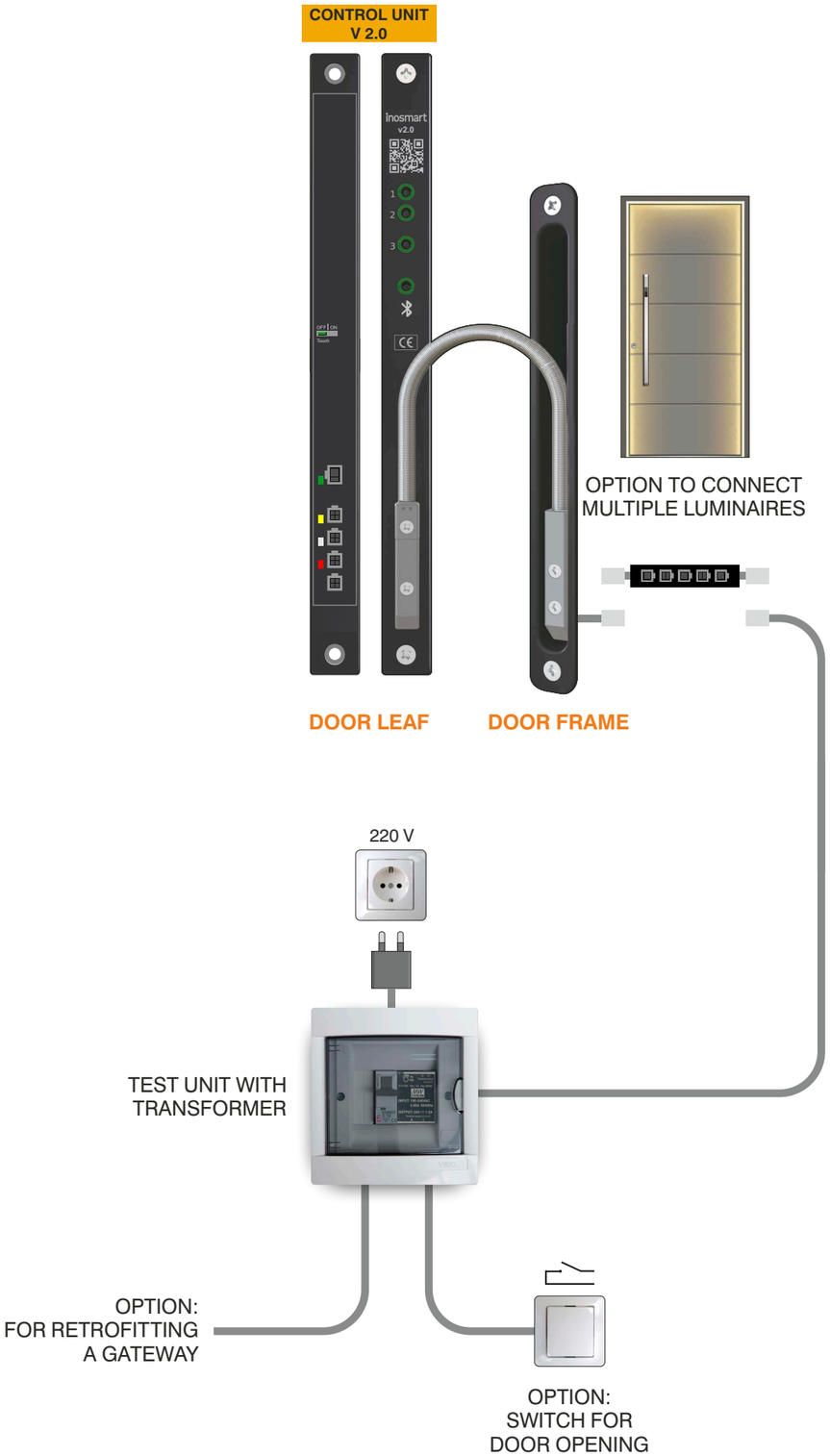

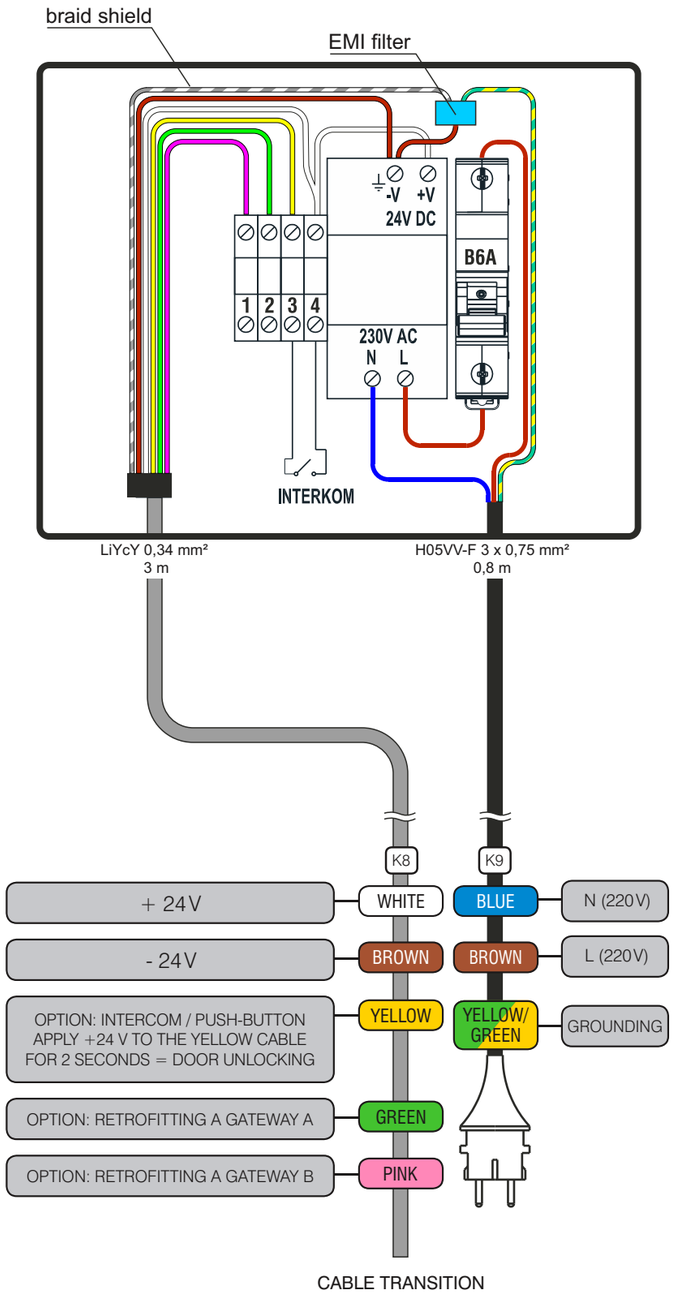

INOSMART BT 6x0 (CA) + GATEWAY + (LED)

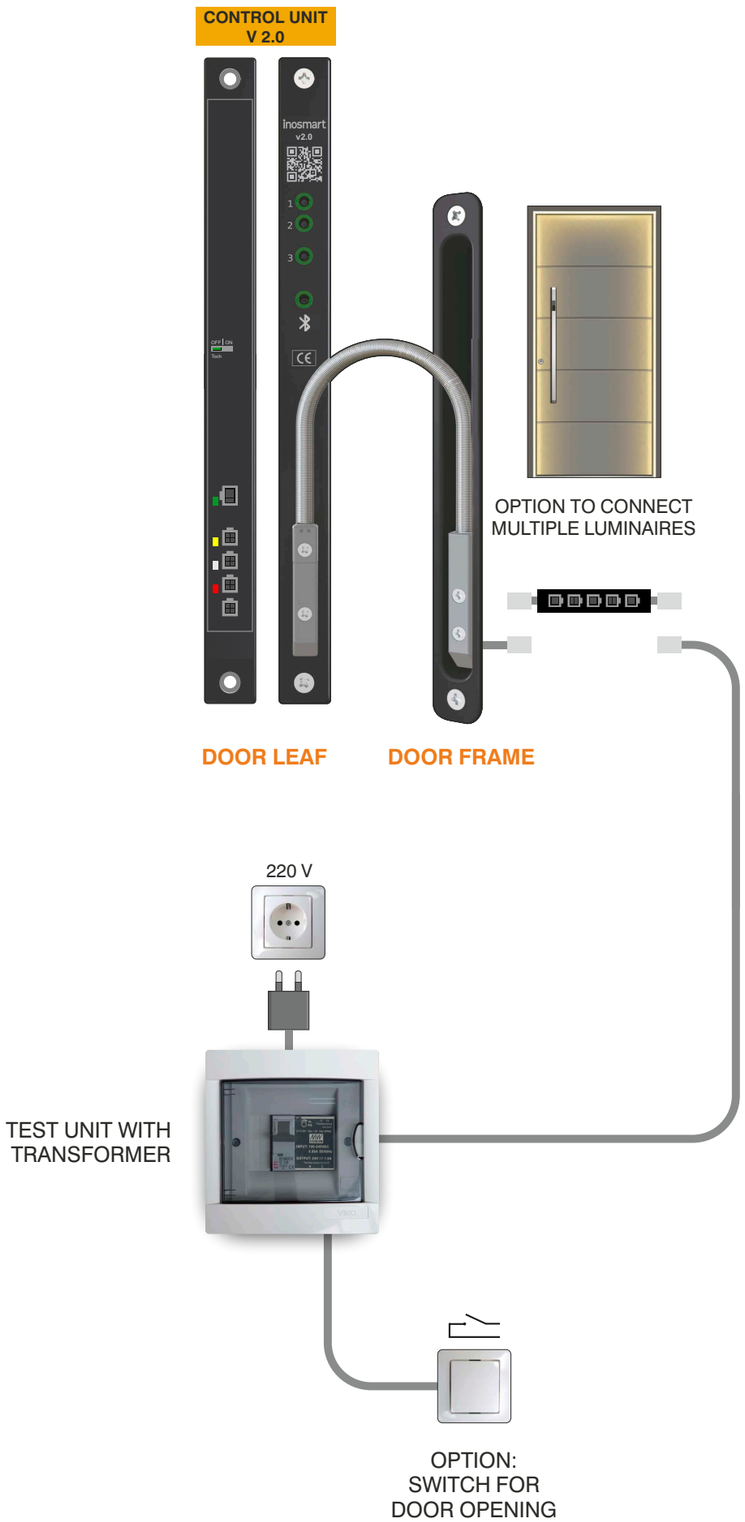

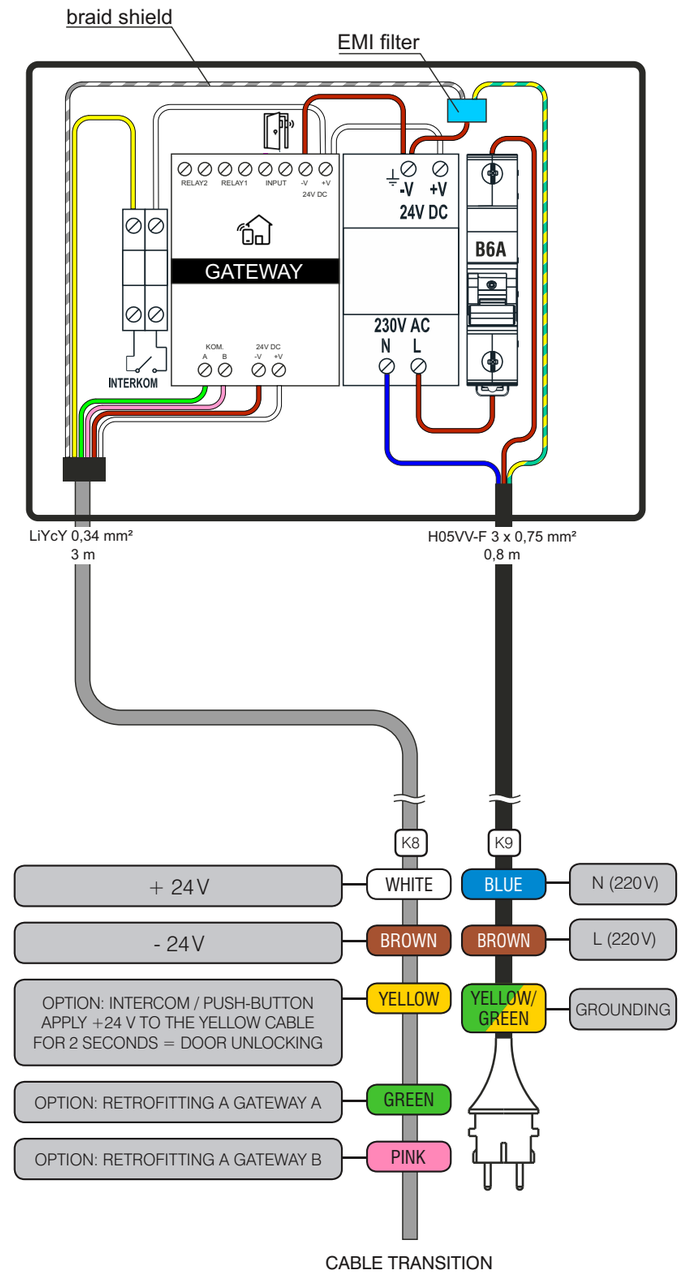

INOSMART BT 6x0 (CB) + GATEWAY (+LED)

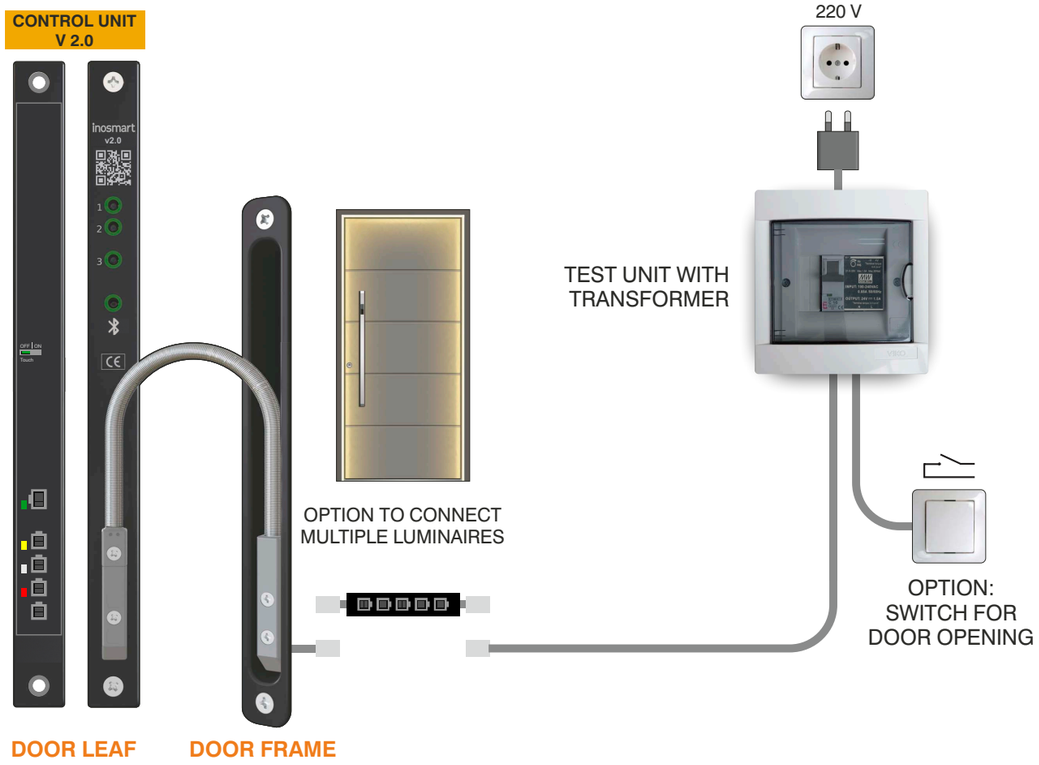

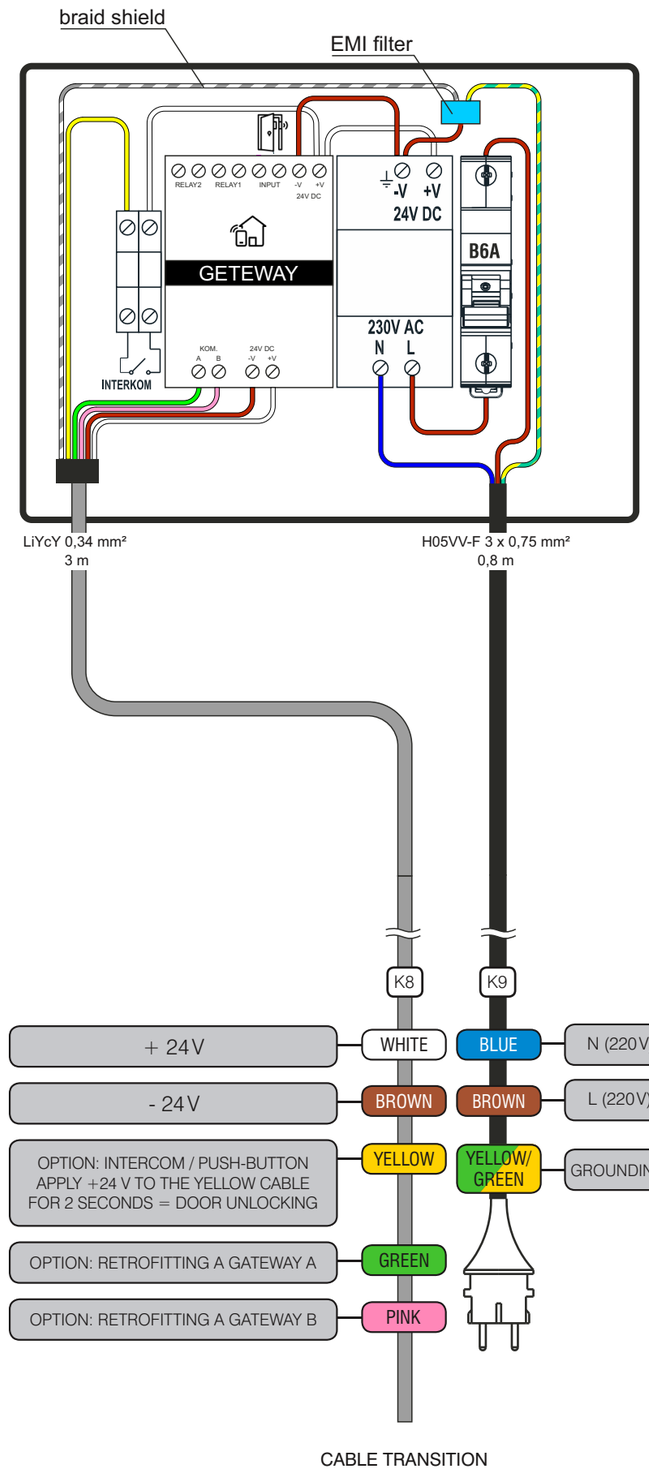

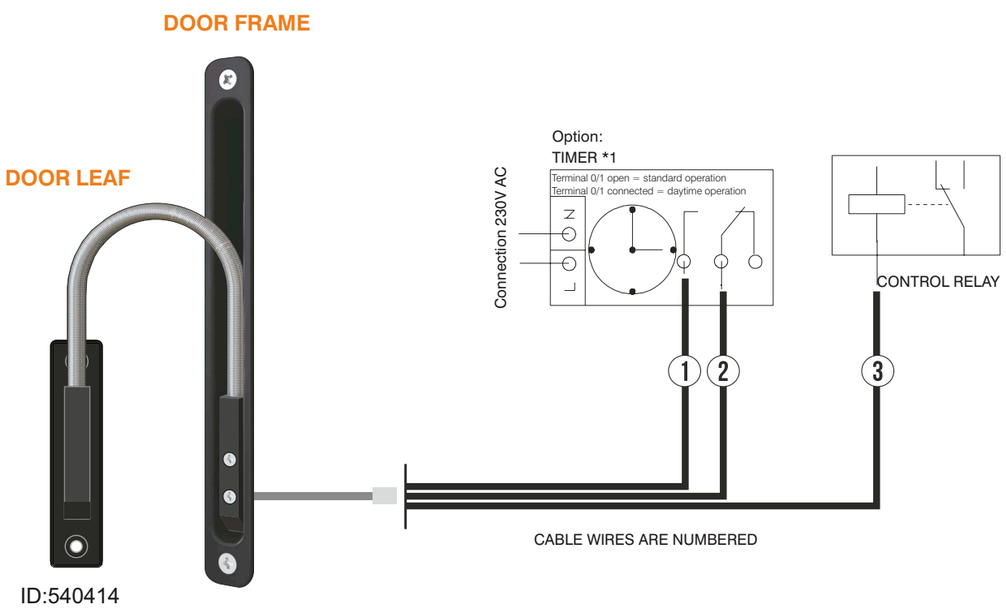

ID:540414

INOSMART BT 6x0 (CB)+ LED+TOUCH GRIFF

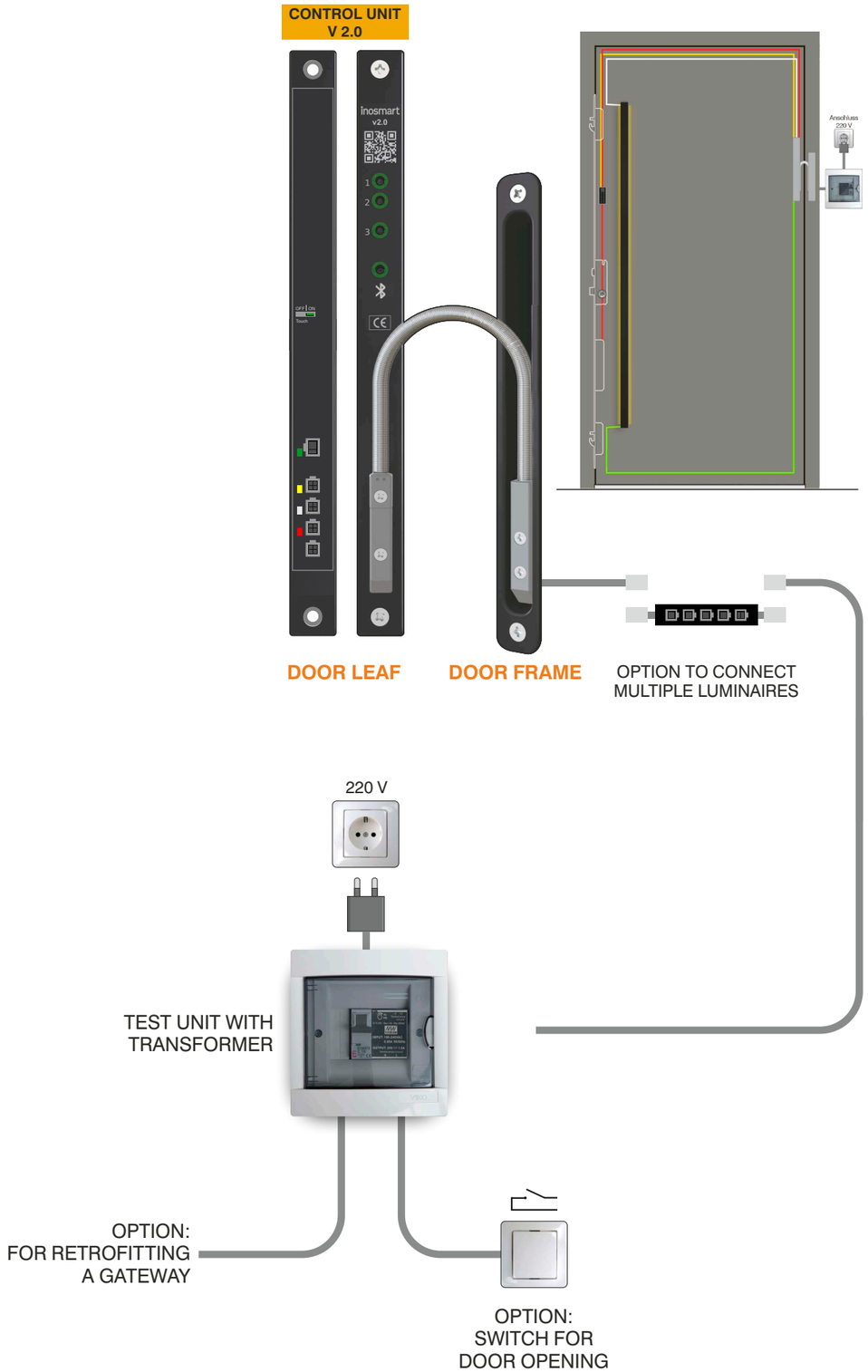

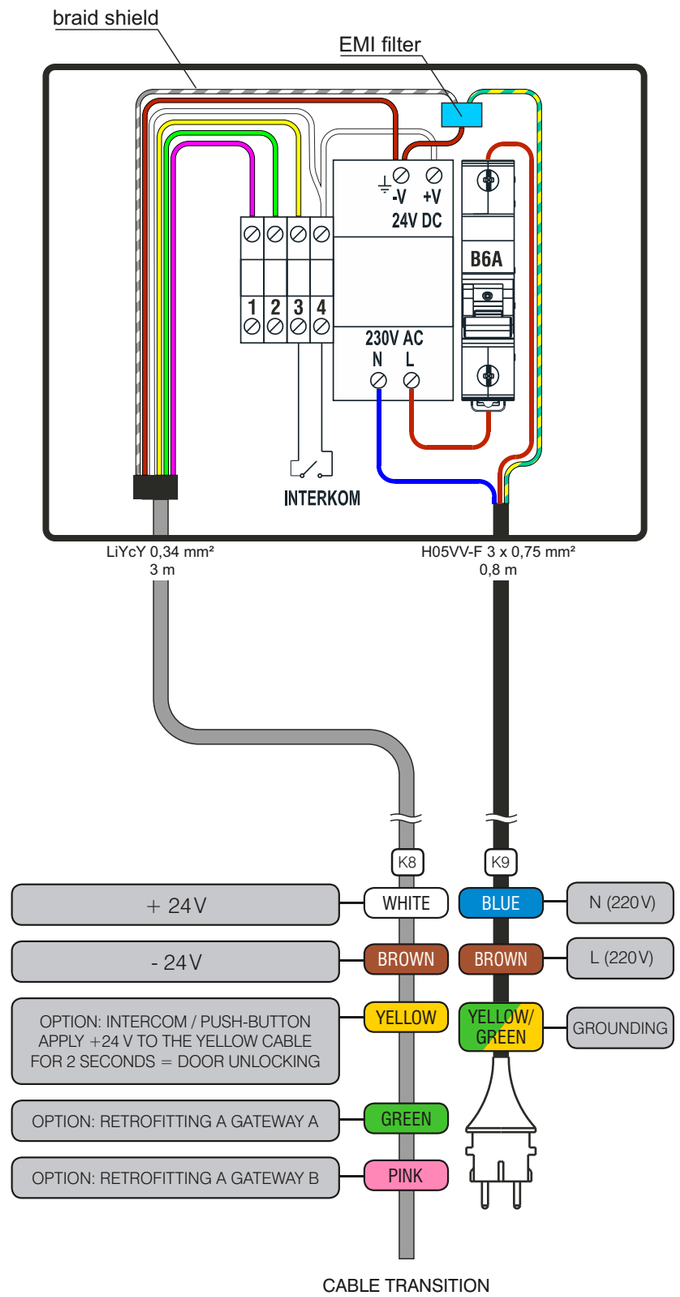

INOSMART BT 6X60 (CB) + LED + SMARTGRIP

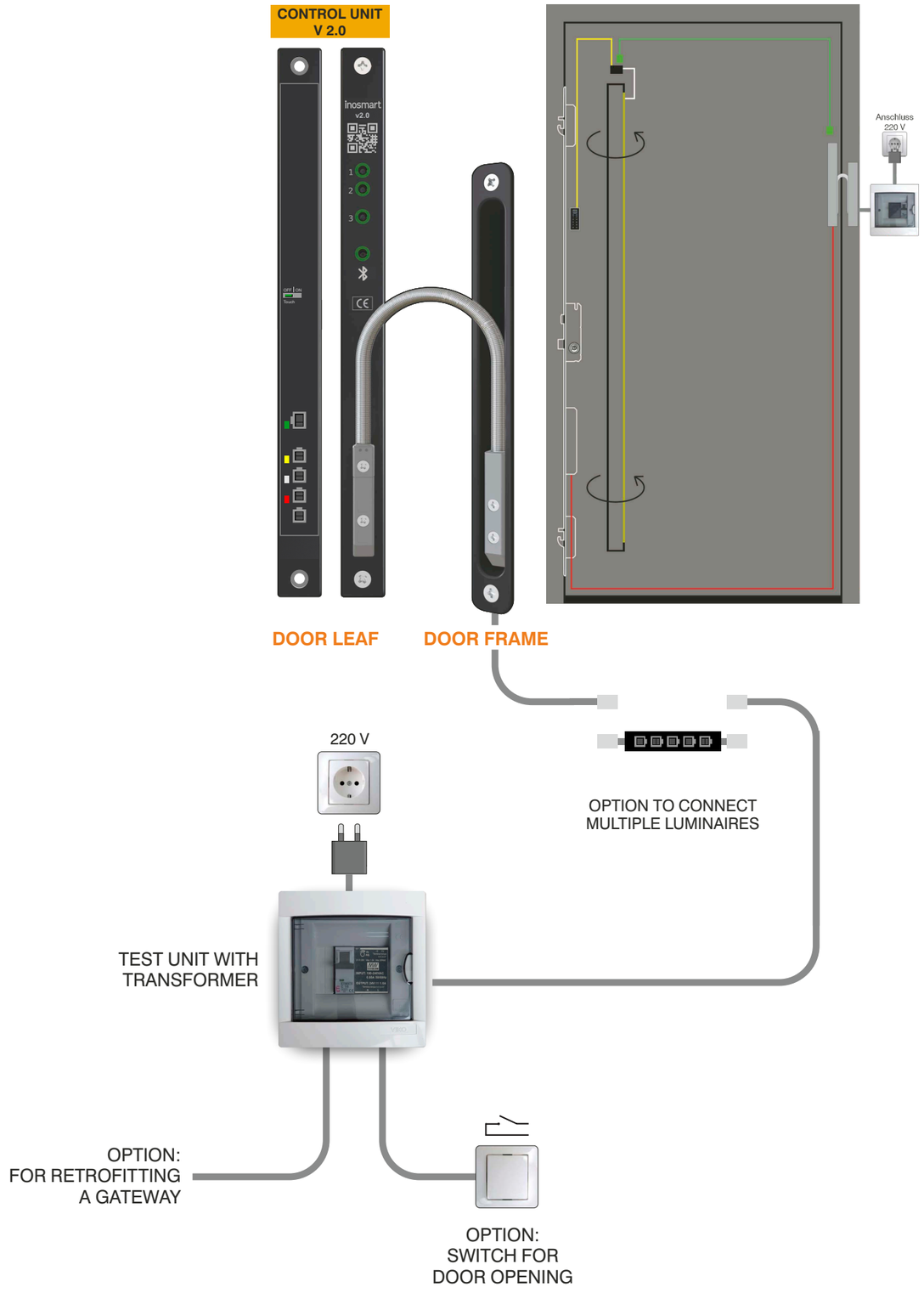

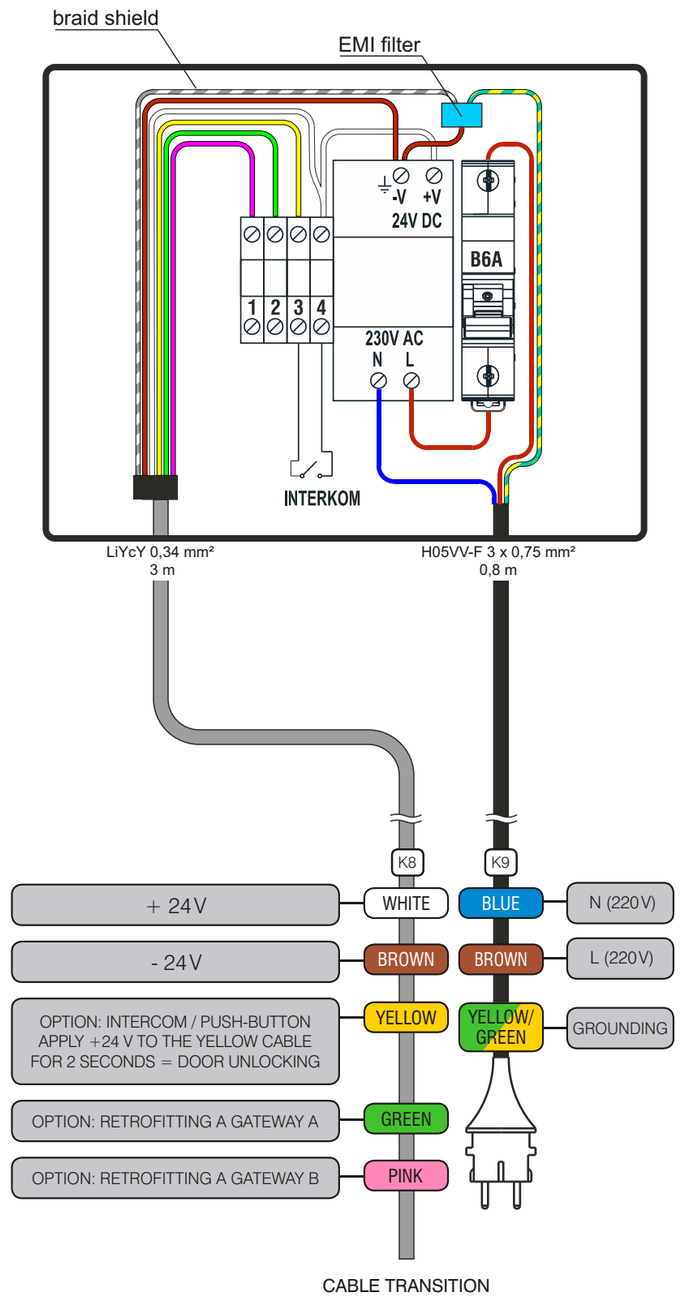

BT 1200 (EC-TURN) + INOSMART BT 6x0 + LED

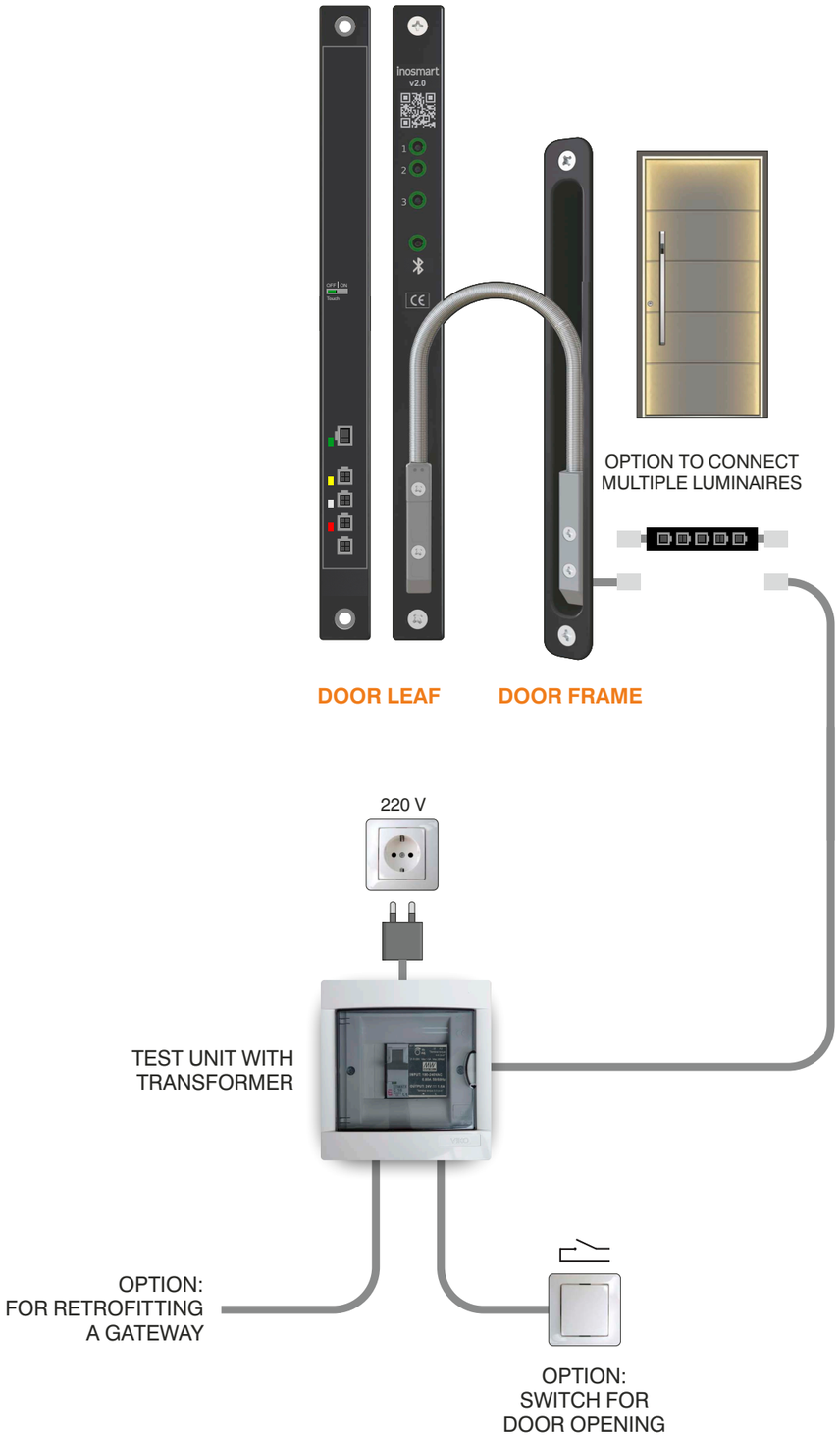

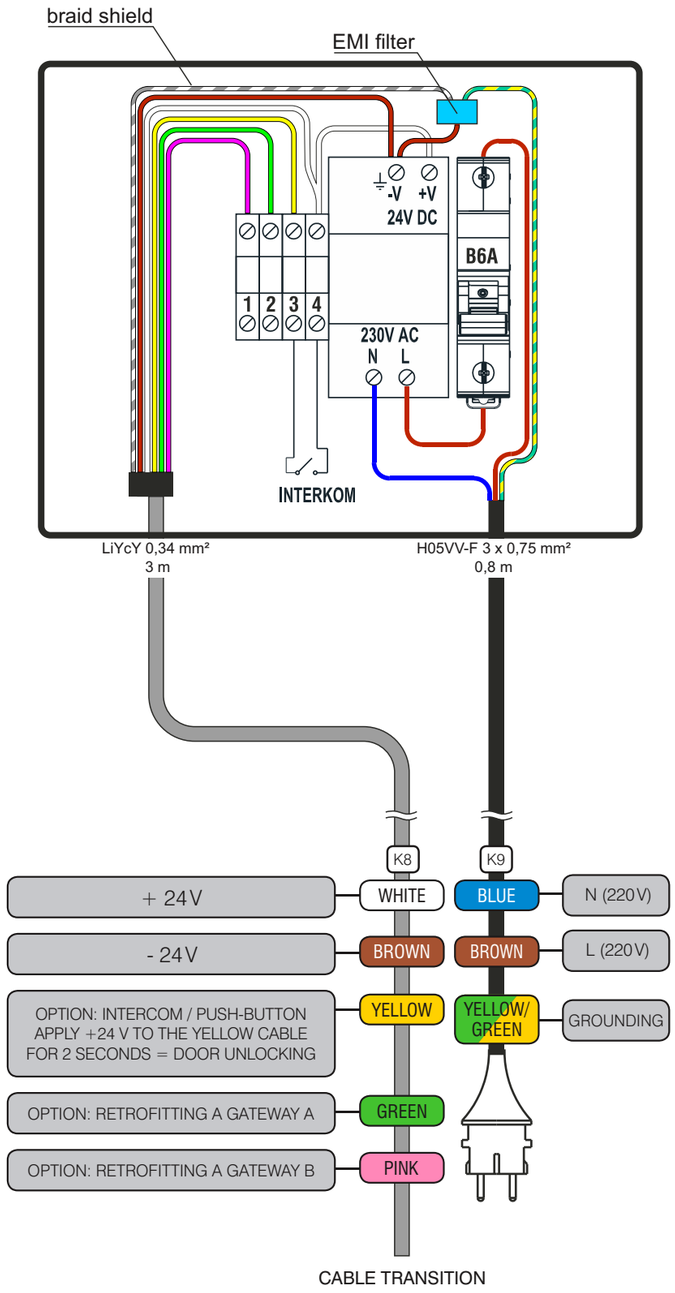

AP 203 + PANIC FUNCTION

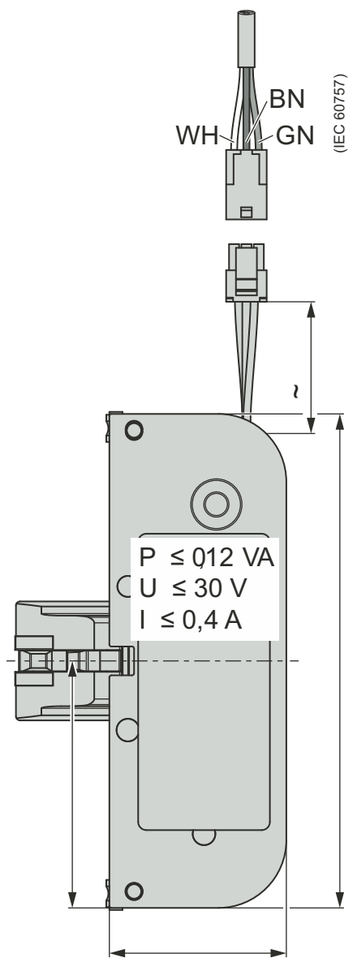

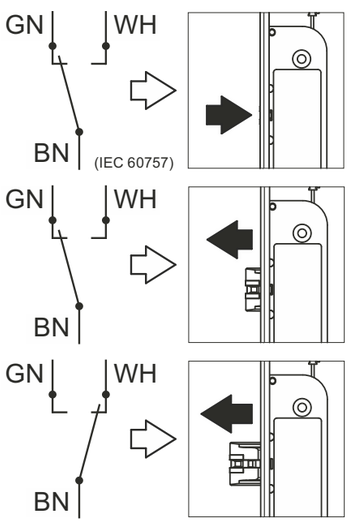

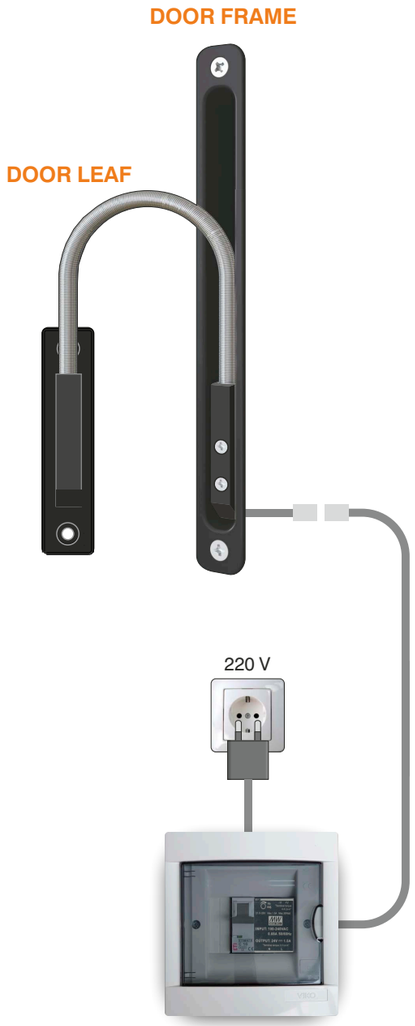

TEST UNIT WITH TRANSFORMER

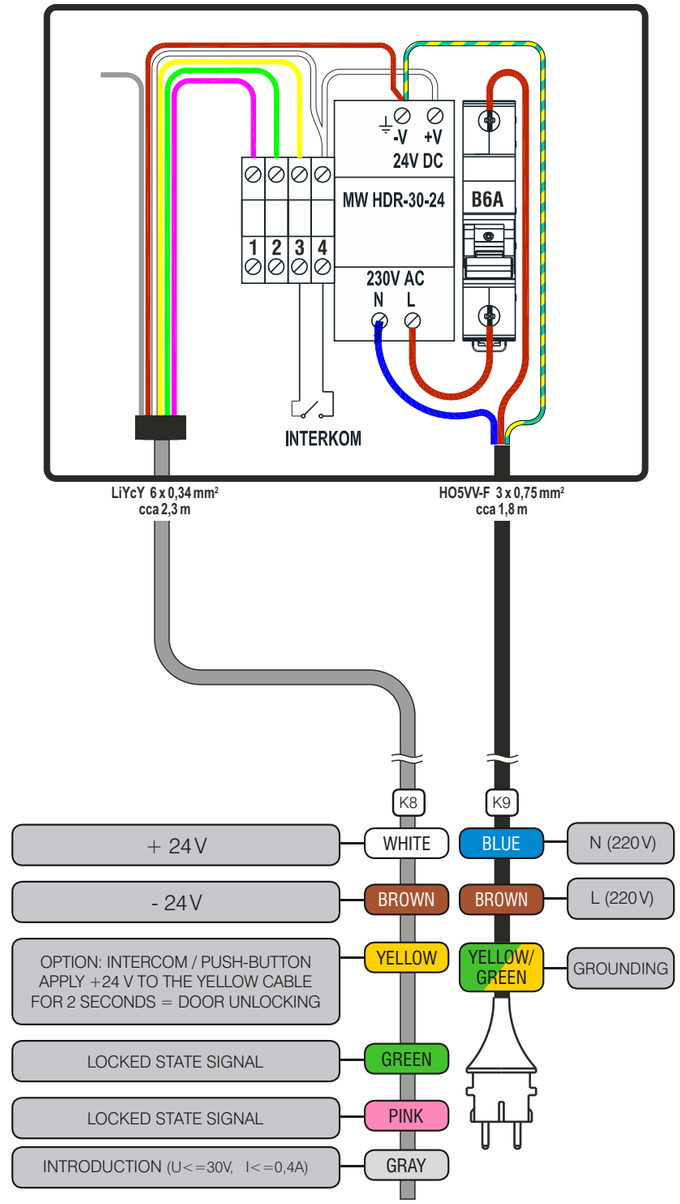

CABLE TRANSITION
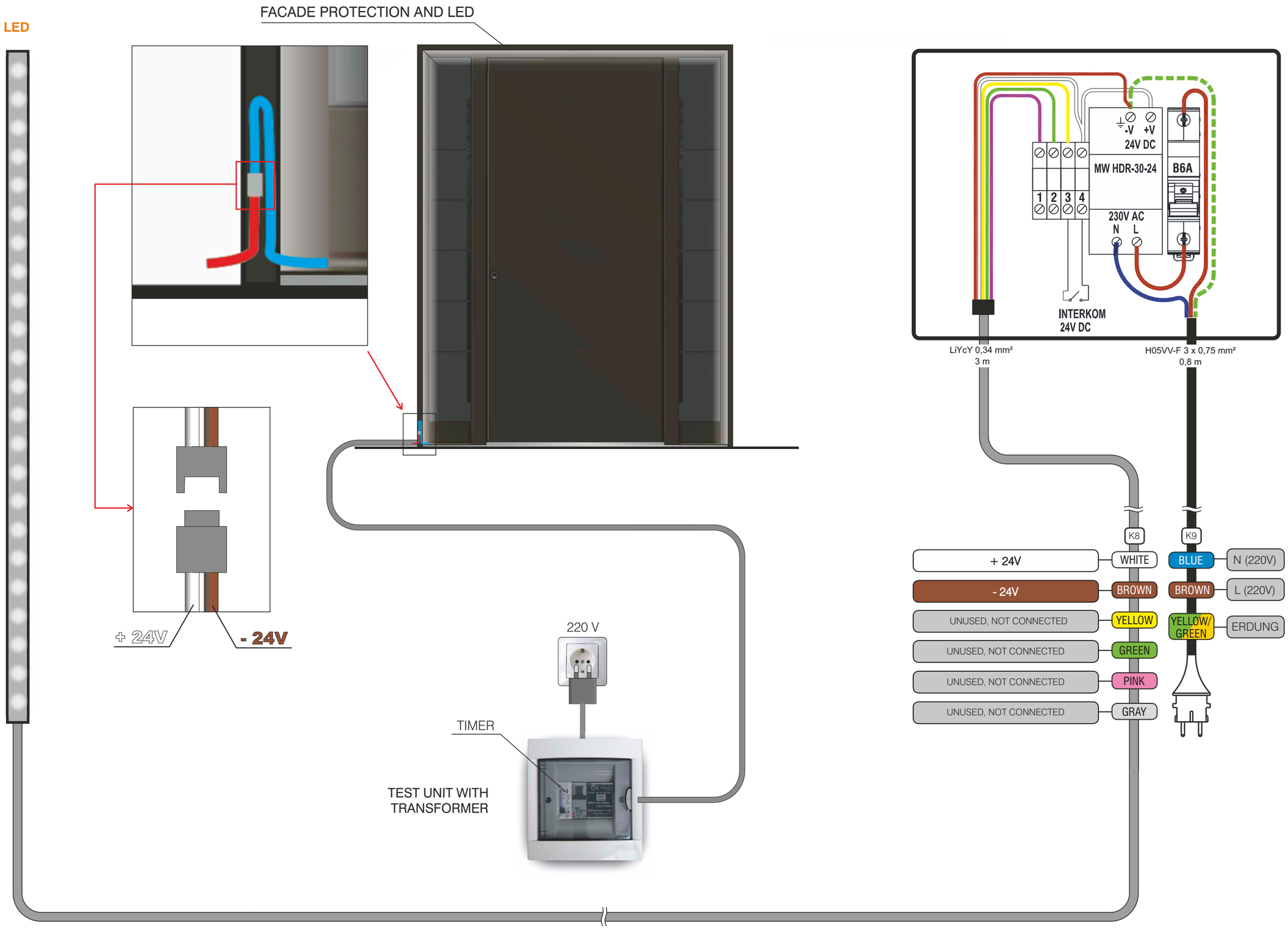
FACADE PROTECTION + LED